Boiler must be grounded in accordance with ANSI National Electric Code.

IMPORTANT: The wiring shown for devices supplied and installed by others is suggested only. Certification of, and responsibility for the correctness of the wiring is the responsibility of the supplier of these devices. Thermal Solutions accepts no responsibility for the correctness or safety or execution of this wiring or of the operation of such devices.

Power Supply Configurations

Voltage (V)	Phase	Freq. (Hz)
208	3	60
230	3	60
480	3	60

Transformer Connections and Fuses

AMP 1500-4000, Three Phase			
V/F/P	208/60/3	230/60/3	480/60/3
A	Follow diagram on the transformer		
B			
C	3 amp	3 amp	3 amp
D	9 amp	9 amp	5 amp

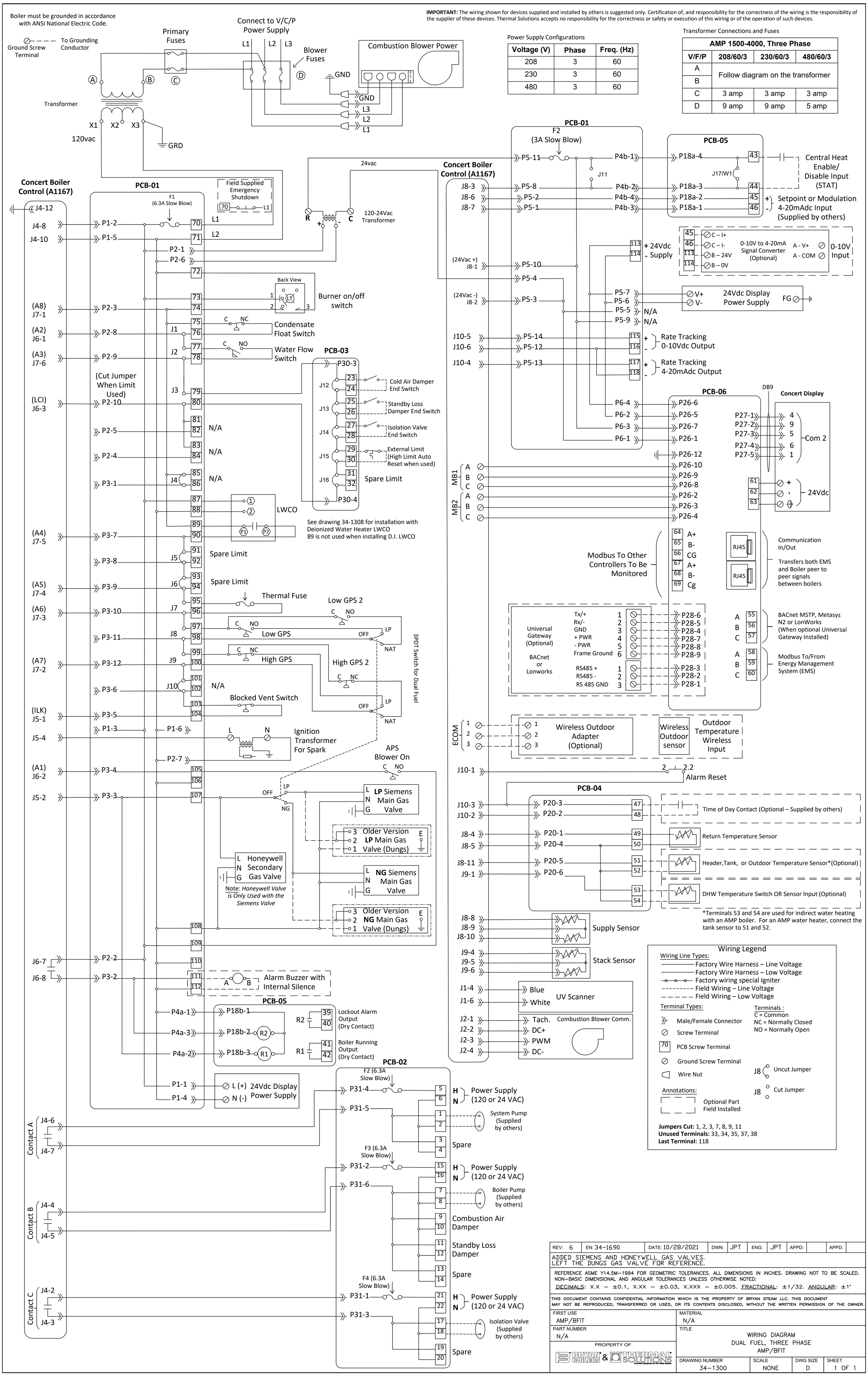

REV: 6	EN: 34-1690	DATE: 10/28/2021	DWN: JPT	ENG: JPT	APPD:	APPD:

ADDED SIEMENS AND HONEYWELL GAS VALVES.
LEFT THE DUNGS GAS VALVE FOR REFERENCE.

REFERENCE ASME Y14.5M–1994 FOR GEOMETRIC TOLERANCES. ALL DIMENSIONS IN INCHES. DRAWING NOT TO BE SCALED. NON–BASIC DIMENSIONAL AND ANGULAR TOLERANCES UNLESS OTHERWISE NOTED:
DECIMALS: X.X – ±0.1, X.XX – ±0.03, X.XXX – ±0.005. FRACTIONAL: ±1/32. ANGULAR: ±1°

THIS DOCUMENT CONTAINS CONFIDENTIAL INFORMATION WHICH IS THE PROPERTY OF BRYAN STEAM LLC. THIS DOCUMENT MAY NOT BE REPRODUCED, TRANSFERRED OR USED, OR ITS CONTENTS DISCLOSED, WITHOUT THE WRITTEN PERMISSION OF THE OWNER.

FIRST USE	MATERIAL
AMP/BFIT	N/A
PART NUMBER	TITLE
N/A	WIRING DIAGRAM DUAL FUEL, THREE PHASE AMP/BFIT

PROPERTY OF BRYAN BOILERS & THERMAL SOLUTIONS

DRAWING NUMBER	SCALE	DWG SIZE	SHEET
34–1300	NONE	D	1 OF 1